bathco

Jerez

Ref. 0066
280x330x160 mm

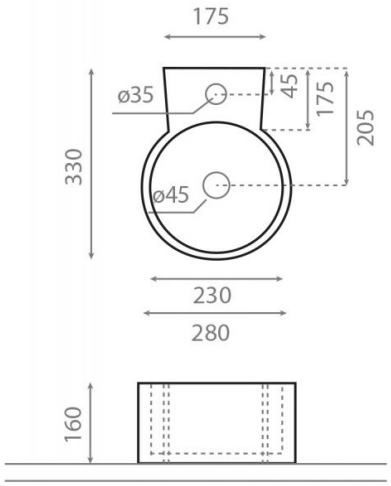

Features

Wall-mounting possibility.With overflow.Net weight 7kg, gross weight 8kg.Units per pallet: 98.

Bath Collection S.L
Bajada del Caleruco, 21A 39012 Santander - SPAIN
T. +34 942 321 222 - F. +34 942 324 898 - info@thebathcollection.com